Chittagong University of Engineering & Technology

Department of Electronics and Telecommunication Engineering

EXPERIMENT NO: 04

Name of the Experiment

Static Routing Configuration

Course No : ETE 452

Course Title : Advanced Communications and Networking Sessional

Date of Experiment : 26/01/2026

Date of Submission : 22/02/2026

REMARKS

Objectives

• To implement multiple LANs interconnected using static routing.
• To observe end-to-end data communication among PCs across different networks.

Software

• Cisco Packet Tracer

Introduction

Static routing is a manually configured routing method where routes are defined by the network administrator. Each router is configured with destination network, subnet mask, and next-hop IP address to enable inter-network communication. It provides controlled and predictable routing behavior in small to medium-sized networks

Procedure

1. LAN topology was created using routers, switches, and PCs.
2. IP addresses and subnet masks were assigned to all interfaces.
3. Default gateways were configured on all PCs.
4. Serial links between routers were configured and activated using `no shutdown`.
5. Static routes were manually configured using `ip route` command.
6. Connectivity was verified using `ping`.

Connection Diagrams:

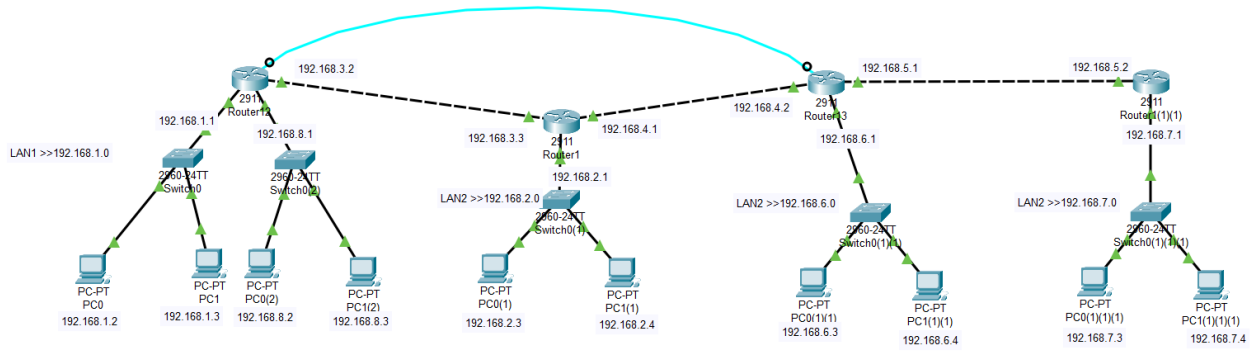

Figure 4.1 : Static Routing Protocol in a network using Four Routers with a console cable.

Table I : Network Addressing Table for the Figure 4.1

Segment Type	Network Name	Network Address	Subnet Mask	Default Gateway / Interface
LAN	LAN1	192.168.1.0	255.255.255.0	192.168.1.1 (Router0 G0/0)
LAN	LAN2	192.168.2.0	255.255.255.0	192.168.2.1 (Router1 G0/0)
LAN	LAN3	192.168.6.0	255.255.255.0	192.168.6.1 (Router2 G0/0)
LAN	LAN4	192.168.7.0	255.255.255.0	192.168.7.1 (Router3 G0/0)
WAN Link	R0 – R1	192.168.3.0	255.255.255.0	192.168.3.2 / 192.168.3.3
WAN Link	R1 – R2	192.168.4.0	255.255.255.0	192.168.4.1 / 192.168.4.2
WAN Link	R2 – R3	192.168.5.0	255.255.255.0	192.168.5.1 / 192.168.5.2

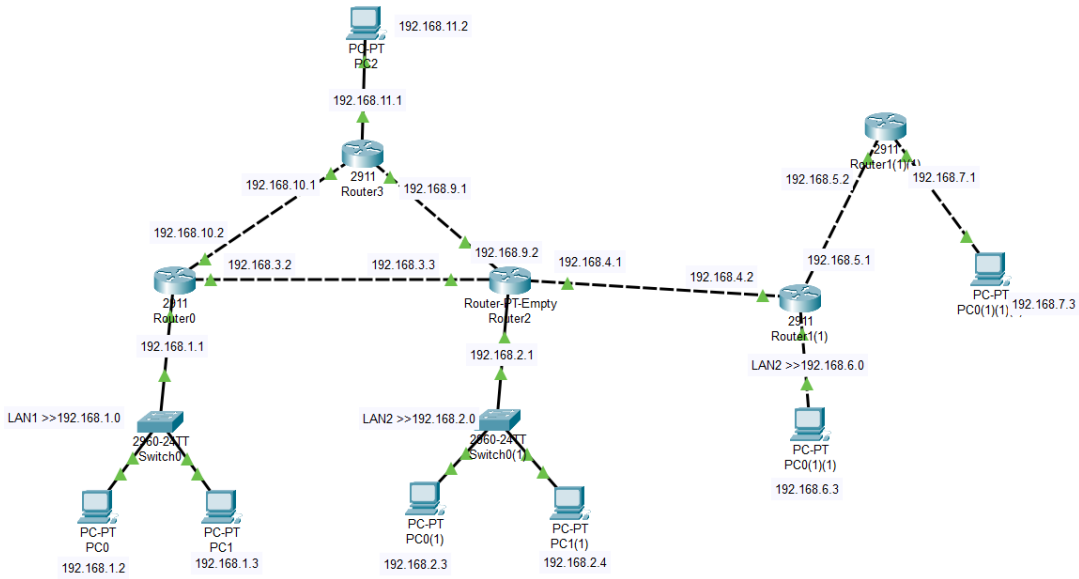

Figure 4.2 : Static Routing Protocol in a network using Five Routers. Router-PT Empty is a modular router in Packet Tracer where interface modules are manually inserted. It allows custom interface configuration for advanced routing simulation.

Table II : Network Addressing Table for the Figure 4.2

Segment Type	Network Name	Network Address	Subnet Mask	Default Gateway / Interface
LAN	LAN1	192.168.1.0	255.255.255.0	192.168.1.1 (G0/0)
LAN	LAN2	192.168.2.0	255.255.255.0	192.168.2.1 (G0/0)
LAN	LAN3	192.168.6.0	255.255.255.0	192.168.6.1 (G0/0)
WAN Link	R0 – R1	192.168.3.0	255.255.255.0	Serial0/0/0
WAN Link	R1 – R2	192.168.4.0	255.255.255.0	Serial0/0/1
WAN Link	R2 – R3	192.168.5.0	255.255.255.0	Serial0/0/0

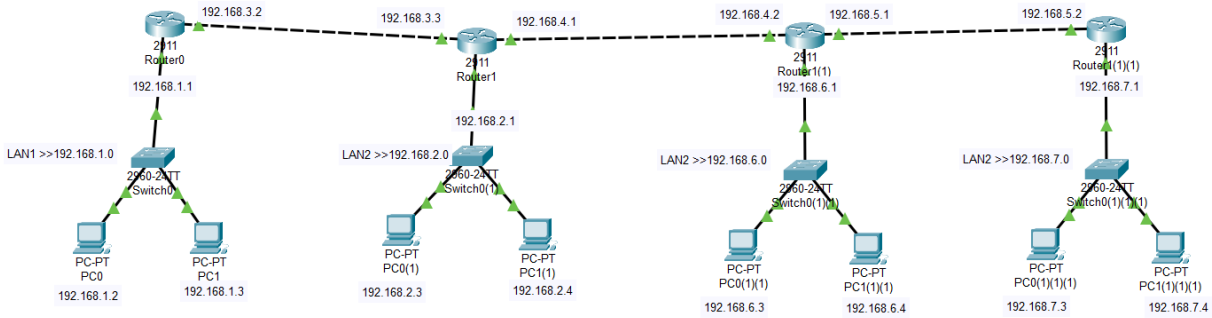

Figure 4.3 : Static Routing Protocol in a network using Four Routers.

Table III : Network Addressing Table for the Figure 4.3

Segment Type	Network Name	Network Address	Subnet Mask	Default Gateway / Interface
LAN	LAN1	192.168.1.0	255.255.255.0	192.168.1.1
LAN	LAN2	192.168.2.0	255.255.255.0	192.168.2.1
LAN	LAN3	192.168.6.0	255.255.255.0	192.168.6.1
LAN	LAN4	192.168.7.0	255.255.255.0	192.168.7.1
WAN Link	R0 – R1	192.168.3.0	255.255.255.0	Static Route via 192.168.3.x
WAN Link	R1 – R2	192.168.4.0	255.255.255.0	Static Route via 192.168.4.x
WAN Link	R2 – R3	192.168.5.0	255.255.255.0	Static Route via 192.168.5.x

Discussion

1. Static routes were manually configured to enable inter-network communication.
2. Proper subnetting was required for accurate packet forwarding.
3. Default gateways were essential for end-device communication.
4. Serial links were activated to establish router connectivity.
5. Routing tables were updated using static route entries.
6. End-to-end connectivity was verified through ICMP testing.
7. Predictable routing behavior was achieved using static configuration.

.